FILE: TLP\800\TLPS-800V-XXP-XS

REV	E.C.N NO.	CONTENT	CHK	DATE
V0.1	S2308013	Add VDE logo,change the Plated	YJ	2023.08.26

NOTES:

1. UL:
   Rating:600V,55A;
   Insulation Withstands Voltage:AC2200V/1MIN;
   Suitable Electric Wire:20AWG～6AWG
2. IEC:
   Rating:1000V,76A;
   Rate Impulse Voltage:6000V;
   Insulation Resistance:500MΩ or more at DC500V;
   Contact Resistance: ≤5mΩ
   Material Group: Ⅰ;
   Pollution Degree:2;
   Overvoltage Category: Ⅱ;
   Suitable Electric Wire:0.5mm²～16mm²
3. Using Temperature Range:-40℃～+115℃;
4. Screw Torque Value:1.8N•m
5. Strip length:13～14mm
6. RoHS compliance;

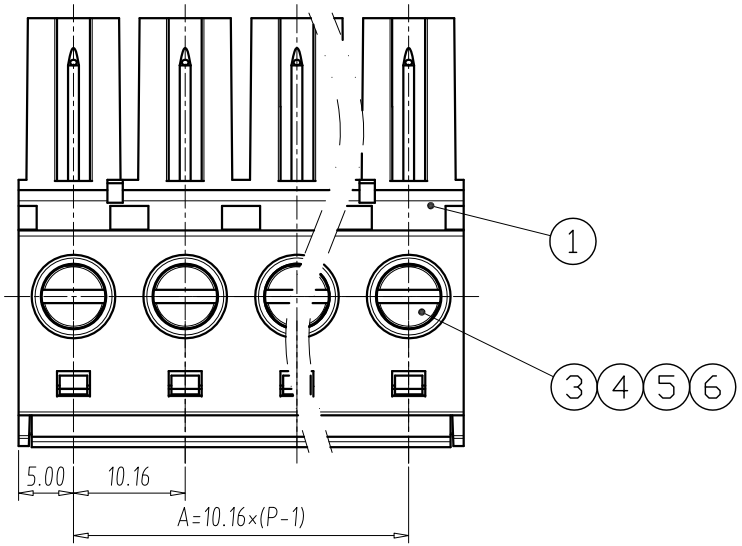

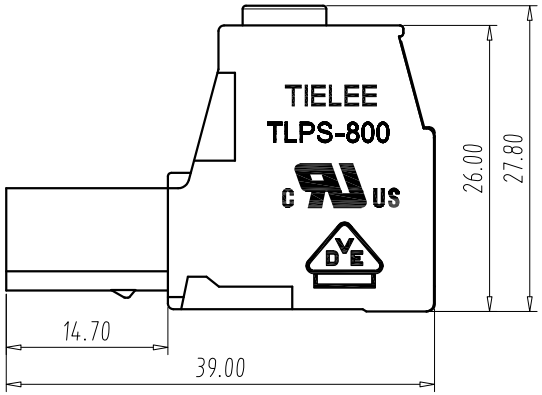

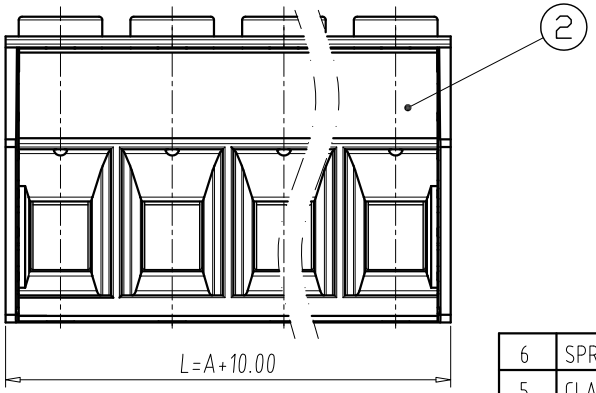

DIM \ P	2	3	4	5	6	7	8	9	10	11
L	20.16	30.32	40.48	50.64	60.8	70.96	81.12	91.28	101.44	111.6
A	10.16	20.32	30.48	40.64	50.8	60.96	71.12	81.28	91.44	101.6

Total Pitch Tolerances in mm									Nominal dimension range in mm								
over 0 to 30	over 30 to 53	over 53 to 70	over 70 to 90	over 90 to 115	over 115 to 150	over 150 to 200	over 200 to 250	over 250 to 320	over 0 to 30	over 30 to 53	over 53 to 70	over 70 to 90	over 90 to 115	over 115 to 150	over 150 to 200	over 200 to 250	over 250 to 320
±0.20	±0.25	±0.3	±0.35	±0.44	±0.55	±0.70	±0.85	±1.00	±0.25	±0.30	±0.35	±0.44	±0.55	±0.70	±0.80	±0.90	±1.20

ITEM	NAME OF PART	Q"TY	MATERIAL	NOTE
6	SPRING	P	STAINLESS	/
5	CLAMP	P	COPPER ALLOY	Ag Plated
4	BLOCK	P	BRASS	Ni Plated
3	SCREW	P	STEEL	M4/Zn Plated
2	COVER	1	PA66	UL94V-0
1	HOUSING	1	PA66	UL94V-0

DWG.	SK	DATE	2021.06.03	UNITS	MM	SHEET/OF	1/1
CHK.		DATE		SCALE	1.5 : 1	A4	
APP.		DATE		NAME	TLPS-800V-XXP-XS		
TIANLI ELECTRICAL MACHINERY(NINGBO)CO.,LTD.				DWGNO.	TLDW-TLPS800VXXPXS		